Pietro Fiorentini

Terval

Pressure Regulators

Terval

Terval is pilot-controlled regulator for medium and low pressure suitable for use with previously fitered non corrosive gases.

Modular Design

This regulator is designed in such a way that on only one body the below listed devices are installed:
- main pressure regulator;
- emergency regulator “monitor”;
- slam shut valve.

Pilots, valve seat of these devices are mantained indipendent. With this solution it is possible to reduce dimensions of pressure reducing unit and to mantain at the same time all required safety devices.
Two version are available:
- TERVAL: main regulator is fail to open type while the monitor are fail to close type;
- TERVAL R: boths main regulator and monitor are fail to close type.

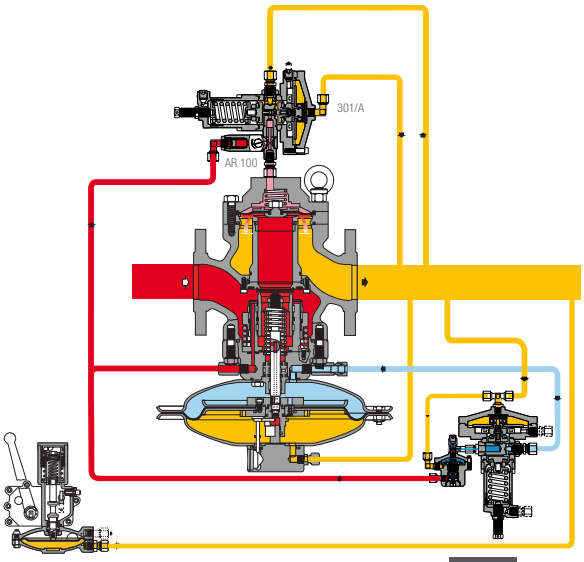

Fig. 1

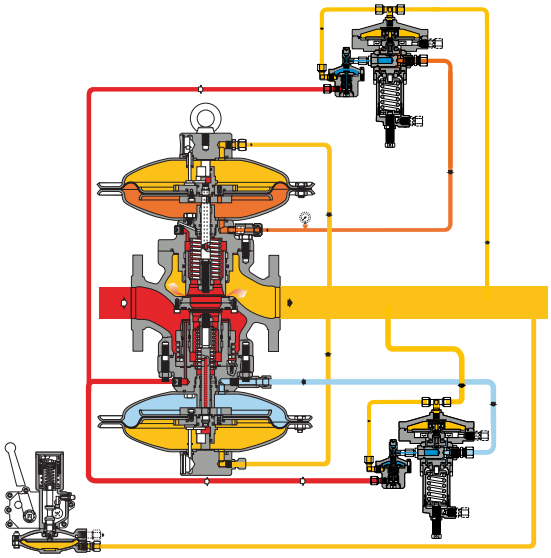

Terval/R

Fig. 2

DESIGNED WITH YOUR NEEDS IN MIND

- COMPACT DESIGN
- EASY MAINTENANCE
- TOP ENTRY
- LOW NOISE
- OUTSTANDING TURN DOWN RATIO
- HIGH ACCURACY
- LOW OPERATION COST
- VERY LOW OPERATING ΔP

SILENCER DB — Terval

Whenever certain noise limit is desired, the silencer allows you to considerably reduce the noise level (dBA) up to the required value.
The Terval pressure regulator can be supplied with an incorporated silencer on active regulator.
With the built-in silencer, the Cg and KG valve coefficients are 5% lower than the corresponding version without the silencer. Given the modular arrangement of the regulator, the silencer may be retrofited to both standard Terval version as well as those with incorporated slam-shut or monitor, without any need to piping modification.
Pressure reduction and control operate the same manner as in standard version.

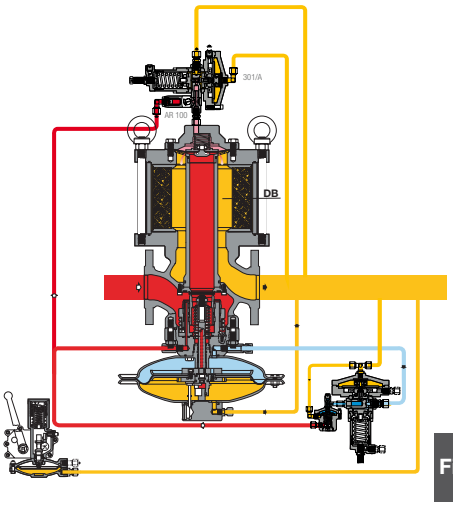

Fig. 3

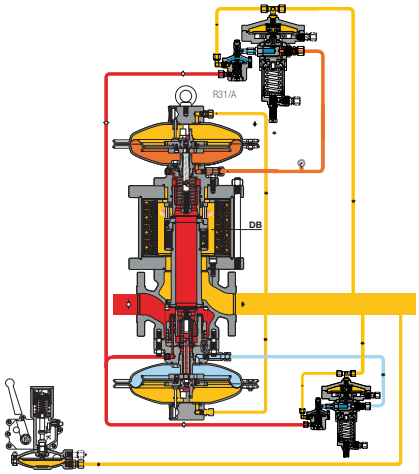

Terval/R + DB

Fig. 4

SLAM SHUT SA — Terval

This device immediately stops gas flow (SAV) if downstream pressure rises up its pressure set. This device can also be activated pressing a push button.
Main characteristics of this device are:
- design pressure: 25 bar for all parts;
- accuracy AG: ±1 on the value of the pressure setting for pressure increasing and ±5% for pressure decreasing;
- balanced plug which allow manual resetting without need of by pass in any working condition;
- intervention on pressure increase and/or decrease;
- manual push-botton control;
- option for pneumatic or electromagnetic remote control;
- small overall size;
- easy maintenance;
- possibility of application of devices for intervention remote signal (contact switches or proximity switches).

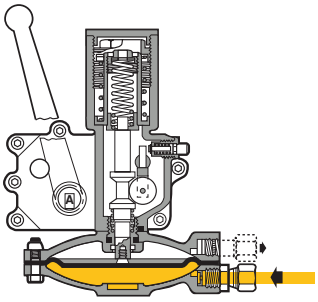

Fig. 5

MAIN FEATURES Terval

> Design pressure: up to 25 bar (362 Psig)
> Design temperature: -10°C to + 60°C (+14 to + 140 °F) (-20°C to + 60°C + 4 to + 140°F on request)
> Ambient temperature: -10°C to + 60°C (+14 to + 140°F) (-20°C to + 60°C + 4 to + 140°F on request)
> Range of inlet pressure bpe: 0,5 to 25 bar (7.25 to 362 Psig)
> Range of outlet pressure Wh: 5 mbar to 9500 mbar (2”w.c. to 137.5 Psig) depending on installed pilot
> Minimum working differential pressure: 450 mbar (6,52 Psig)
> Maximum working differential pressure: 19 bar (275,5 Psig)
> Accuracy class AC: up to 2,5
> Closing pressure class SG: up to 5
> Available size DN: 2” -2”1/2 -3” -4”
> Flanging: class 150 RF according to ANSI B16.5 and PN16 according to UNI 2282 or DIN 2263.

MATERIALS Terval

Body	Cast steel ASTM A216 WCB for all sizes Ductile iron GS 400-18 ISO 1083 for Size ≤ 8”
Head covers	Dye stamped carbon steel
Stem	AISI 416 Stainless steel
Plug	ASTM A 350 LF2 Nickel coated on sealing surfaces
Valve seat	Steel + vulcanized rubber
Diaphragm	Rubberized canvas
Seals	Nitrile rubber
Compression fittings	According to DIN 2353 in zinc-plated carbon steel

The characteristics listed above are referred to standard products. Special characteristics and materials for specific applications may be supplied upon request.

Pietro Fiorentini

Cg, K_G and K1 coefficient — Terval

Nominal diameter (mm)	50	65	80	100
Size (inches)	2”	2”1/2	3”	4”
Cg flow coefficient	1706	2731	3906	4590
K_G flow coefficient	1796	2875	4112	5775
K1 body shape factor	108	104	100	100

Cg, K_G and K1 coefficient — Terval/R

Nominal diameter (mm)	50	65	80	100
Size (inches)	2”	2”1/2	3”	4”
Cg flow coefficient	1667	2793	4099	5660
K_G flow coefficient	1755	2940	4315	5954
K1 body shape factor	104	104	106	106

For sizing formula refer to

www.fiorentini.com/sizing

PILOTS Terval

Terval regulators are equipped with series 200 and series 300 pilot as listed below:
- 201/A control range Wh: 7 mbar to 0,58 bar; (2,8 W.c. to 8.4 Psig)
- 204/A. control range Wh: 0,3 to 12 bar; (4,35 to 174 Psig)
- 301/. control range Wh: 5 mbar to 100 mbar; (2” W.c. to 1,45 Psig)
- 301/.TR control range Wh: 0,1 to 2 bar; (1,45 to 29 Psig)
- 302/. control range Wh: 0,8 to 9,5 bar; (11,6 to 137 Psig)

Pilots may be adjusted manually or remotely

Pilot adjustments Terval

Pilot type .../A	Manual setting
Pilot type .../D	Electric remote setting control
Pilot type .../CS	Pneumatic remote setting control

Restrictor

The pilot loop is completed with a device called restrictor, external to the pilot.
The restrictor listed below is available:
- **AR 100**: variable restrictor to adjust regulator response time complete with integral filter at the inlet. Standard supply with all pilots of 300 Series

PRESSOSTATIC DEVICE Terval

MOD. SA	MIN.	MAX
./91	0,008 ÷ 0,9	0,016 ÷ 1,2
./92	0,25 ÷ 2,7	0,7 ÷ 5
./93	0,8 ÷ 5,8	3 ÷ 10,5

values in bar(g)

OPTIONALS Terval

For Regulator
- reduced cage
- flow-limiting devices
- steel fittings, single or dual sealing

For Pilot
- supplementary filter CF 14
- dehydrating filter CF 14/D

M/A ACCELERATOR Terval

When the monitor is required to take over rapidly in the event of a main regulator failure, an M/A or V/25 accelerator pilot installation on the monitor is recommended. Installation of the accelerator is mandatory when monitor is used as safety accessory according to PED directive. This device, connected by sensing line to the downstream pressure, discharges the gas enclosed in the motorization chamber of the monitor regulator, allowing the monitor to take over faster.
A V/25 accelerator is available too with pressure set range Who 15 mbar to 6 bar.
In case of working monitor configuration (two stage pressure cut with monitor override) the accelerator may not be necessary.

Terval

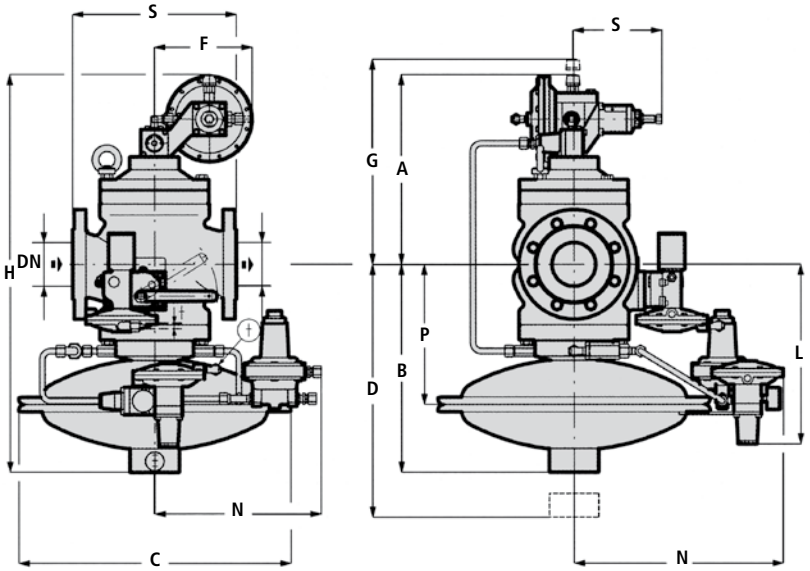

Overal dimensions in mm

Size (mm)	50	65	80	100
Inches	2”	2”1/2	3”	4”
S - Ansi 150/PN 16	254	276	298	352
A	313	341	346	429
B	308	373	380	410
C	375	495	495	495
D	430	530	530	600
E	160	160	160	160
F	178	178	178	178
G	323	351	356	439
H	613	715	725	843
L	280	325	330	360
M	320	385	385	385
N	290	298	303	306
P	205	250	260	290
x	øe10 x øi 8 Pilot exhaust			
t	øe10 x øi 8 Downstream sensing line			
w	øe10 x øi 8 Accelerator exhaust			

Face to face dimensions S according to IEC 534-3 and EN 334

Weights in Kgf

S - Ansi 150/PN 16	60	94	110	140

Pietro Fiorentini

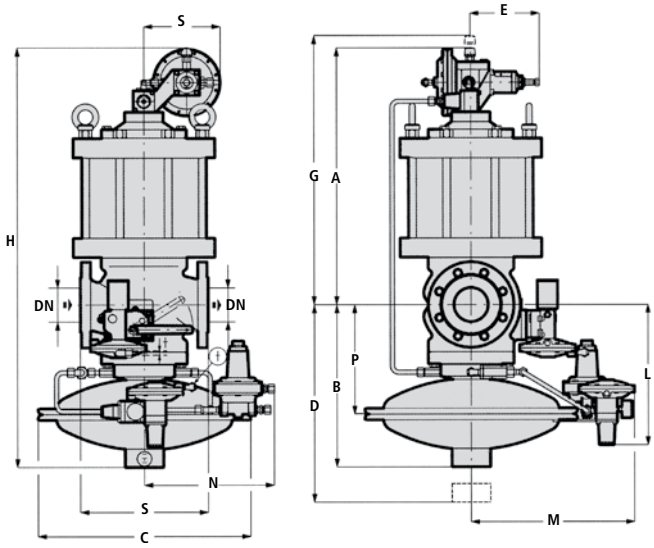

Overal dimensions in mm

Size (mm)	50	65	80	100
Inches	2”	2 1/2”	3”	4”
S - Ansi 150/PN 16	254	276	298	352
A	487	555	576	678
B	308	373	380	410
C	375	495	495	495
D	430	530	530	600
E	160	160	160	160
F	178	178	178	178
G	497	565	586	688
H	795	913	980	1088
L	280	325	330	360
M	320	385	385	385
N	290	298	303	306
P	205	250	260	290
x	øe10 x øi 8 Pilot exhaust			
t	øe10 x øi 8 Downstream sensing line			
w	øe10 x øi 8 Accelerator exhaust			

Weights in Kgf

S - Ansi 150/PN 16	94	124	152	210

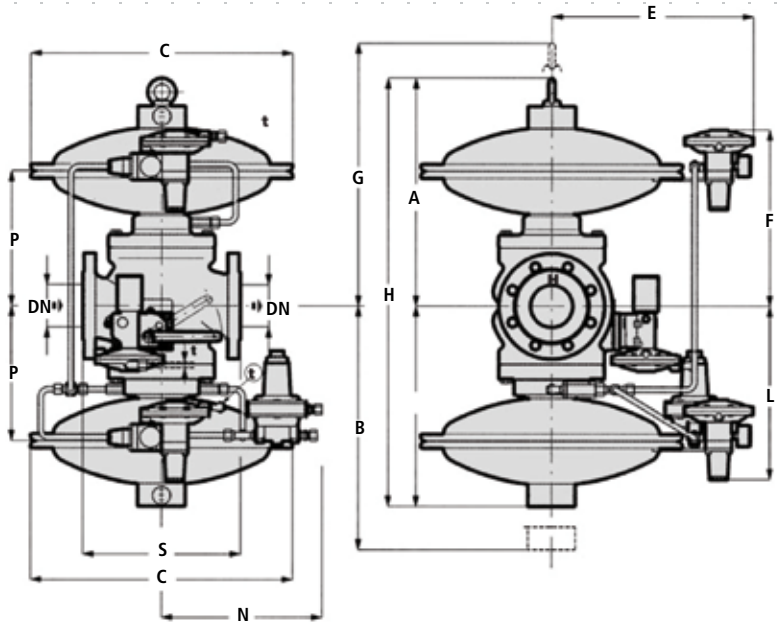

Overal dimensions in mm

Size (mm)	50	65	80	100
Inches	2”	2”1/2	3”	4”
S - Ansi 150/PN 16	254	276	298	352
A	353	426	430	467
B	308	373	380	410
C	375	495	495	495
D - G	430	530	530	600
E	320	385	385	385
F	280	330	335	367
H	665	800	810	877
L	280	325	330	360
P	205	250	260	290
N	290	298	303	306
t	øe10 x øi 8 Downstream sensing line			
w	øe10 x øi 8 Accelerator exhaust			

Face to face dimensions S according to IEC 534-3 and EN 334.

Weights in Kgf

S - Ansi 150/PN 16	70	107	123	170

Pietro Fiorentini

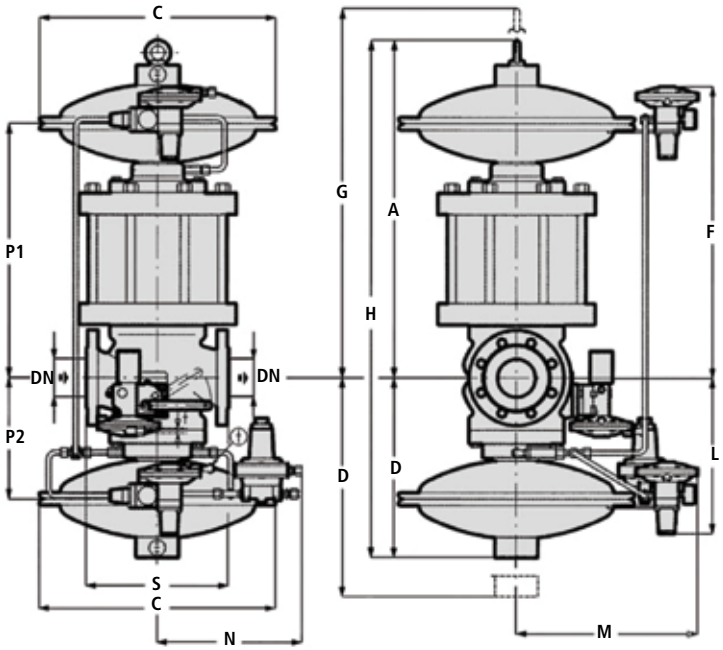

Overal dimensions in mm

Size (mm)	50	65	80	100
Inches	2”	2”1/2	3”	4”
S - Ansi 150/PN 16	254	276	298	352
A	550	650	675	781
B	308	373	380	410
C	375	495	495	495
D	430	530	530	600
F	515	550	615	681
G	640	780	785	851
H	865	1020	1090	1191
L	280	325	330	360
M	320	385	385	385
N	290	298	303	306
P1	400	470	505	605
P2	205	250	260	290
t		øe10 x øi 8 Downstream sensing line		
w		øe10 x øi 8 Accelerator exhaust		

Face to face dimensions S according to IEC 534-3 and EN 334

Weights in Kgf

S - Ansi 150/PN 16	104	137	165	240

Pietro Fiorentini Solutions

Reducing and metering stations

Metering

Ball valves

Pietro Fiorentini

Pietro Fiorentini S.p.A.
via E.Fermi 8/10
I-36057 Arcugnano (VI) Italy

Tel. +39 0444 968.511
Fax. +39 0444 960.468

The data are not binding. We reserve the right to make eventual changes without prior notice.

CT-s 598-E February 14

www.fiorentini.com